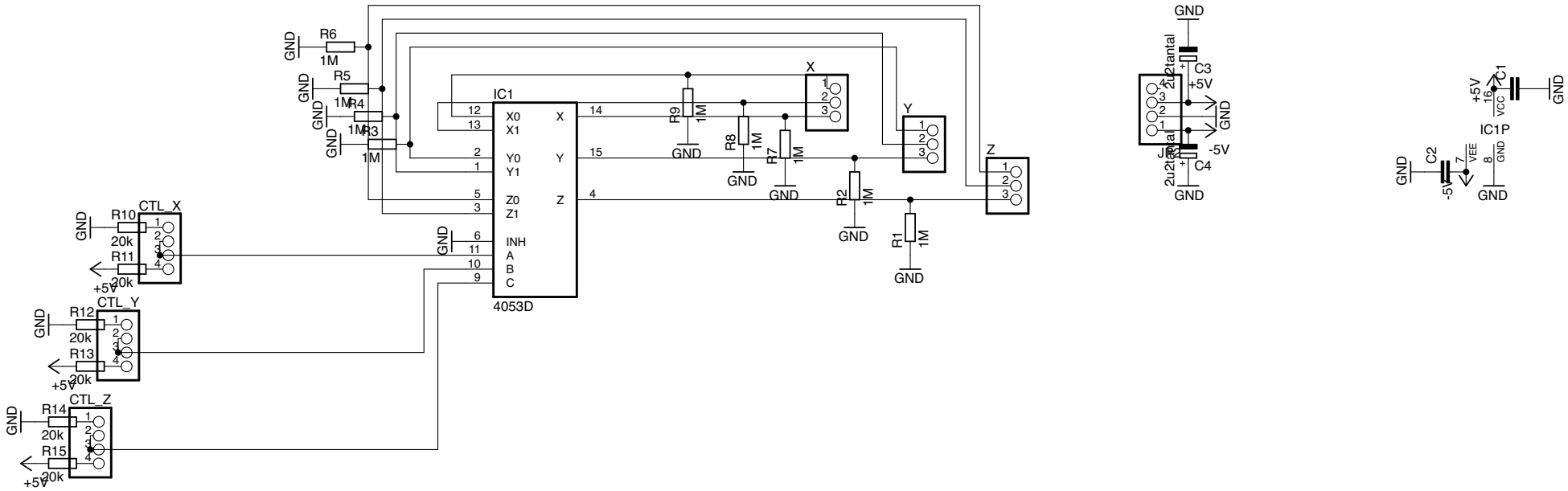
IC1
4053D
X0
X1
Y0
Y1
Z0
Z1
INH
A
B
C
X
Y
Z
R1 1M
R2 1M
R3 1M
R4 1M
R5 1M
R6 1M
R7 1M
R8 1M
R9 1M
R10 20k
R11 20k
R12 20k
R13 20k
R14 20k
R15 20k
CTL_X
CTL_Y
CTL_Z
GND
+5V
C3 2u2tantal
C4 2u2tantal
J1
-5V
C1
C2
IC1P
VCC
VEE