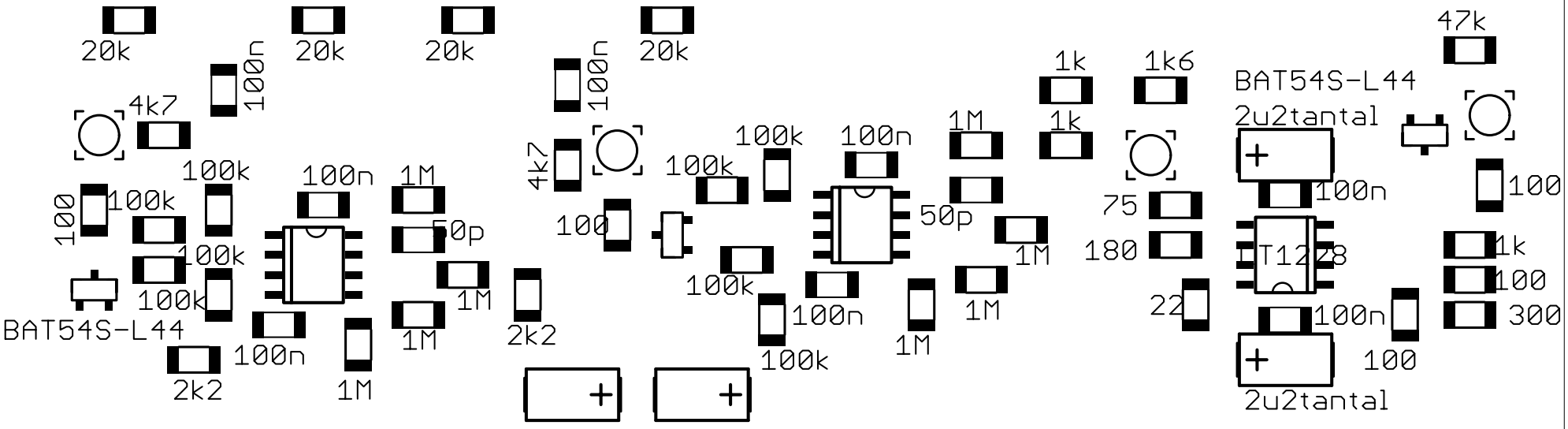
20k
20k
20k
20k
100n
100n
4k7
4k7
100k
100k
100k
100k
100k
100k
100k
100k
100
100
100
100
100n
100n
100n
100n
100n
1M
1M
1M
1M
1M
1M
1M
1M
50p
50p
2k2
2k2
BAT54S-L44
BAT54S-L44
1k
1k
1k6
75
180
22
47k
2u2tantal
2u2tantal
100n
100n
100n
LT1228
100
1k
100
300
100