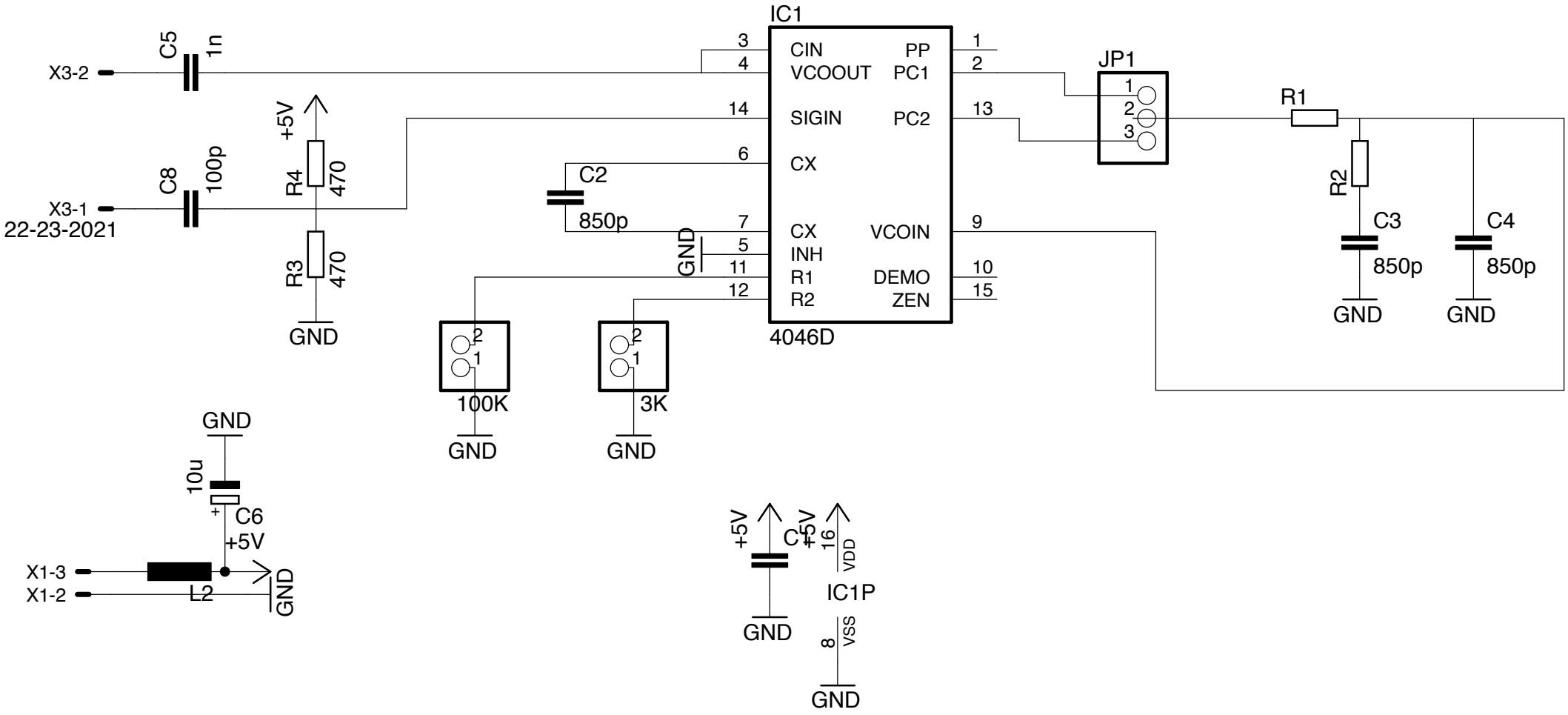

14.11.13 22:09 f=1.60 /Users/me/Documents/eagle/synkie-SVN/sk810-subcarrier/sk810-subcarrier.sch (Sheet: 1/1)