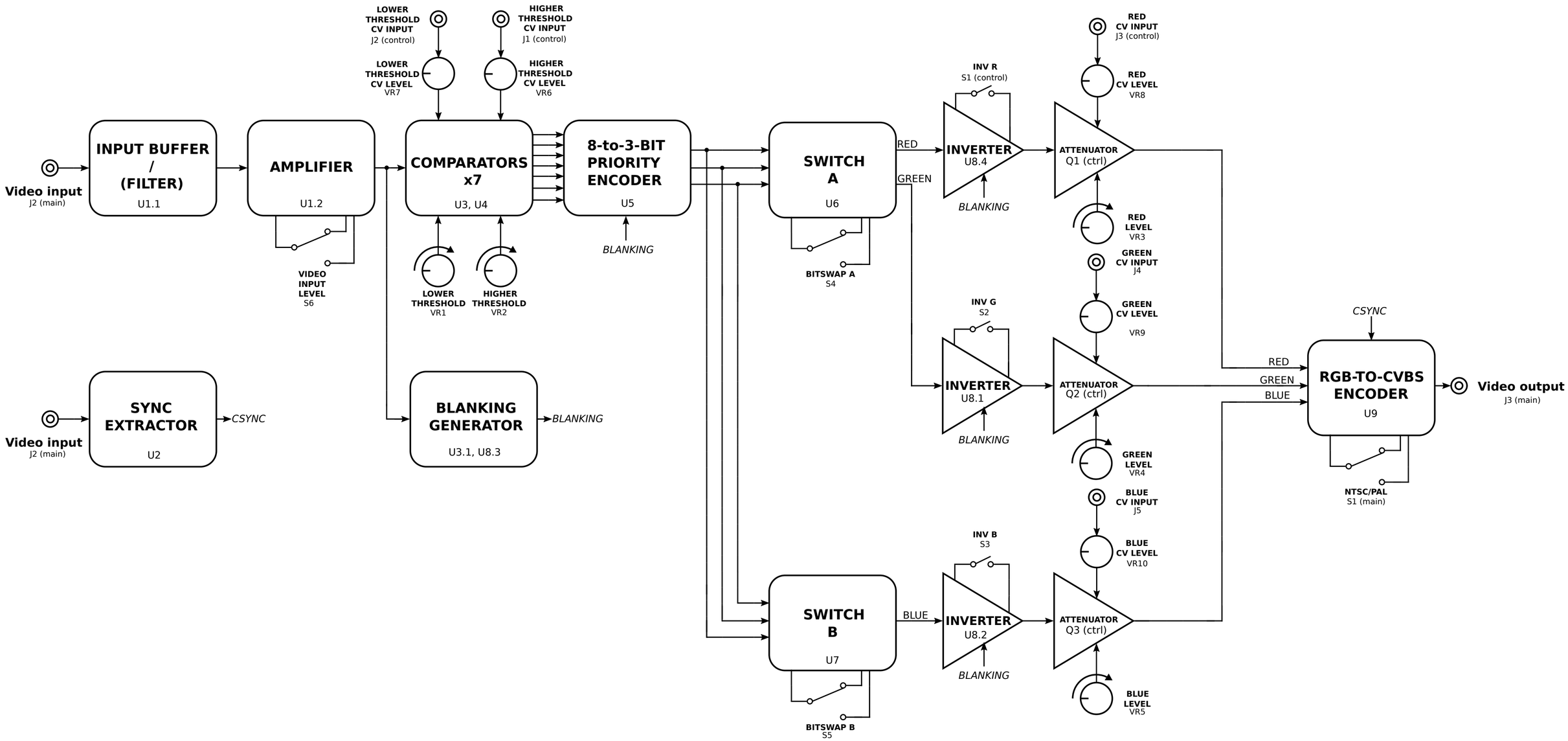
Video input
J2 (main)
INPUT BUFFER / (FILTER)
U1.1
AMPLIFIER
U1.2
VIDEO INPUT LEVEL
S6
LOWER THRESHOLD CV INPUT
J2 (control)
HIGHER THRESHOLD CV INPUT
J1 (control)
LOWER THRESHOLD CV LEVEL
VR7
HIGHER THRESHOLD CV LEVEL
VR6
COMPARATORS x7
U3, U4
LOWER THRESHOLD
VR1
HIGHER THRESHOLD
VR2
8-to-3-BIT PRIORITY ENCODER
U5
BLANKING
Video input
J2 (main)
SYNC EXTRACTOR
U2
CSYNC
BLANKING GENERATOR
U3.1, U8.3
BLANKING
SWITCH A
U6
BITSWAP A
S4
RED
GREEN
INV R
S1 (control)
INVERTER
U8.4
BLANKING
ATTENUATOR
Q1 (ctrl)
RED CV INPUT
J3 (control)
RED CV LEVEL
VR8
RED LEVEL
VR3
GREEN CV INPUT
J4
GREEN CV LEVEL
VR9
INV G
S2
INVERTER
U8.1
BLANKING
ATTENUATOR
Q2 (ctrl)
GREEN LEVEL
VR4
BLUE CV INPUT
J5
BLUE CV LEVEL
VR10
INV B
S3
SWITCH B
U7
BITSWAP B
S5
BLUE
INVERTER
U8.2
BLANKING
ATTENUATOR
Q3 (ctrl)
BLUE LEVEL
VR5
CSYNC
RED
GREEN
BLUE
RGB-TO-CVBS ENCODER
U9
NTSC/PAL
S1 (main)
Video output
J3 (main)